VIGI by tp-link

Datasheet
Security Never Shuts Down

Network Camera Pole Mounting Bracket

MODEL: VMB-350



Features

- SGCC Galvanized Steel Material
- Compatible with Bullet and PT VIGI Cameras*
- Easy to Install
- Suitable for 70-130 mm Pole Mounting
- Dimensions: 4.1 × 3.9 × 1.5 in (105 × 100 × 39 mm)

Build Features



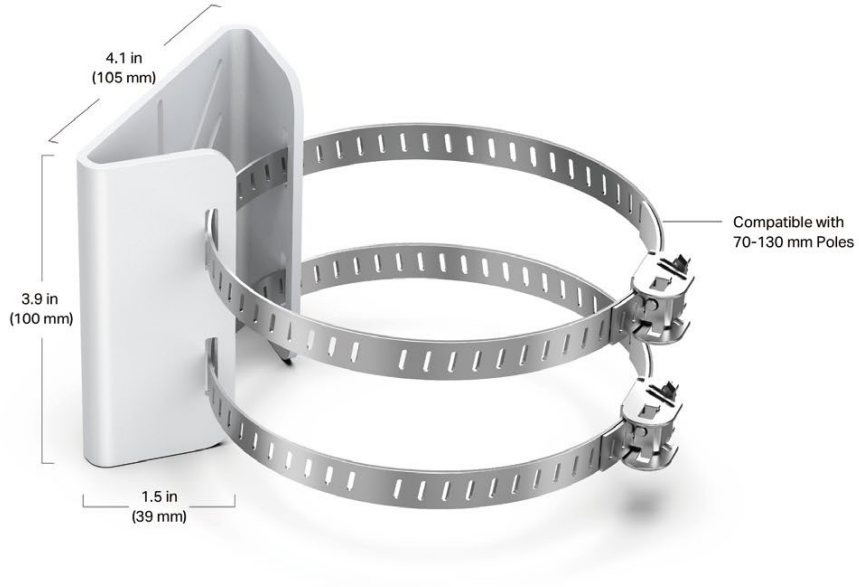

*It is recommended to use with VIGI Camera to prevent compatibility issues, overload, and other problems. VMB-350 is not compatible with all VIGI Cameras, visit https://www.vigi.com/en/vigi-accessories/product-list/.

Specifications

Appearance	VIGI White
Material	SGCC Galvanized and Stainless Steel
Weight	392.25g
Product Dimensions (W × D × H)	4.1 × 3.9 × 1.5 in (105 × 100 × 39 mm)
Package Contents	Mounting Bracket, Mounting Accessories, Installation Guide
Dimensions	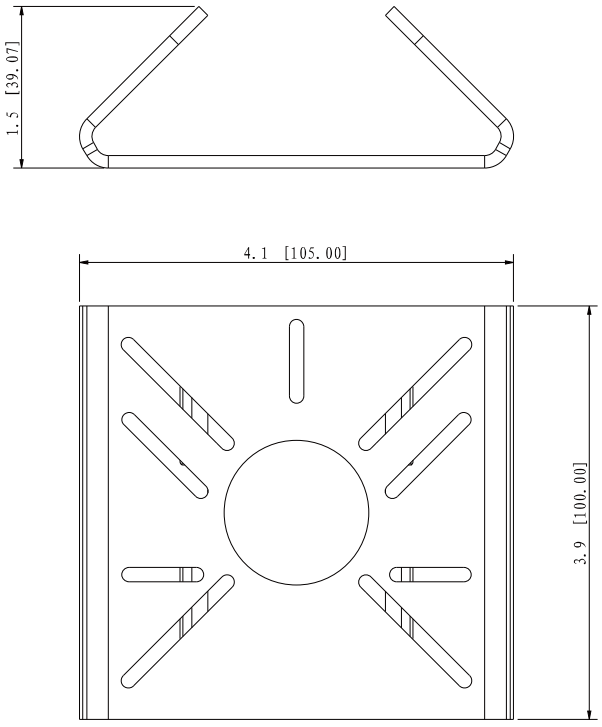

Specifications are subject to change without notice. All brands and product names are trademarks or registered trademarks of their respective holders. © 2025 TP-Link