DHI-TPC-BF1241-V1

Thermal Network Mini Hybrid Bullet Camera



- Vanadium oxide uncooled focal plane detector.
- 1/1.8" 4Megapixel progressive scan CMOS.
- AI functions: heat (fire) detection, tripwire, human/vehicle classification, smoking detection, call detection, and smoke detection.
- Local audio, white light alarm prompts, red and blue light alarm prompts.
- Dual image fusion (visible and thermal channels).
- Built-in dual microphones.
- Wide input voltage12 (±20%)–24 VDC; PoE (802.3af).
- IP67 rated and IK10-rated housing.
- Ultra low false alarm with Xinghan Large-Scale AI Model

Featuring thermal and visible channels, Eureka series thermal network camera offers various AI functions such as tripwire, intrusion, call detection, smoking detection, and heat (fire) detection. It can be used in short-distance monitoring scenes such as perimeter protection and heat (fire) monitoring, which provides an all-in-one video surveillance solution for small and medium scenes. The camera is widely applied in factory, parking lot, villa, and more.

Technical Specification

Thermal

Detector Type	Vanadium oxide uncooled focal plane detector
Max. Resolution	256 (H) × 192 (V)
Pixel Pitch	12 μm
Spectral Range	8 μm–14 μm
Thermal Sensitivity (NETD)	≤25 mK@f/1.0
Field of View	3.5 mm: H: 50.6°; V: 37.8° 7 mm: H: 24.0°; V: 18.0° 10 mm: H: 17.3°; V: 13.1°
Close Focus Distance	3.5 mm: 0.5 m (1.64 ft) 7 mm: 1 m (3.28 ft) 10 mm: 2 m (6.56 ft)
Aperture	F1.0
Digital Detail Enhancement (DDE)	Yes
Digital Zoom	16 levels
AGC	Auto; Manual
Noise Reduction	2D NR; 3D NR
Image Flip	0°; 90°; 180°; 270°
Color Palettes	18 (white hot/black hot/fusion/rainbow/golden autumn/ midday/iron red/amber/jade/sunset/icefire/painting/ pomegranate/emerald /spring/summer/autumn/winter)
Fusion Mode	Yes (disabled by default)

Visible

Image Sensor	1/1.8" CMOS
Max. Resolution	2688 (H) × 1520 (V)
Pixel	4 MP
Electronic Shutter Speed	1/30,000 s–1 s
Min. Illumination	Color: 0.05 lux Black & white: 0.005 lux 0 lux (IR on)
Illumination Distance	IR: 3.5 mm: 30 m (98.43 ft); 7 mm: 50 m (164.04 ft); 10 mm: 50 m (164.04 ft) Warm light: 30 m (98.43 ft)
Illuminator On/Off Control	Auto; Manual
Aperture	4 mm: F1.6 6 mm: F1.6 12 mm: F1.7
Field of View	4 mm: H: 88.0°; V: 49.9° 6 mm: H: 59.9°; V: 34.7° 12 mm: H: 37.3°; V: 21.4°
Focus Control	Fixed
Close Focus Distance	4 mm: 1 m (3.28 ft) 6 mm: 1.7 m (5.58 ft) 12 mm: 2.5 m (8.2 ft)
Day/Night	Auto (ICR); Color; B/W
BLC	Yes
WDR	120 dB
HLC	Yes

White Balance	Auto; Manual; Indoor; Outdoor; Tracking; Street lamp; Natural
AGC	Auto; Manual
Noise Reduction	2D NR; 3D NR
S/N Ratio	≥55 dB
Region of Interest (RoI)	RoI cannot be deleted
Image Flip	0°; 90°; 180°; 270°

Intelligence

General Intelligence	Tripwire; Intrusion
Advanced Intelligence	Heat (fire) Detection & Alarm Cold & Hot Spot Trace Human & Vehicle Classification Smoking Detection Call Detection Smoke Detection

Temperature Measurement

Temperature Range	Low temperature mode: –20 °C to +150 °C(–4 °F to +302 °F)
Temperature Accuracy	Max (±8°C, ±8%)
Operating Temperature	–20 °C to +50 °C (–4 °F to +122 °F)

Video and Audio

Video Compression	H.265; H.264; H.264H; MJPEG
Resolution	Thermal: Main stream: 1280 × 960; 1024 × 768; 640 × 480; 256 × 192; 1280 × 960 (default); Sub stream: 640 × 480; 256 × 192; 256 × 192 (default) Visible: Main stream: 2688 × 1520; 1920 × 1080; 1280 × 720; 704 × 576; 2688 × 1520 (default); Sub stream: 1280 × 720; 704 × 576; 352 × 288; 352 × 288 (default)
Frame Rate	Thermal (50 Hz): Main stream: 1 fps–25 fps, 25 fps by default; Sub stream: 1 fps–25 fps, 15 fps by default; Visible (50 Hz): Main stream: 1 fps–25 fps, 25 fps by default; Sub stream: 1 fps–25 fps, 15 fps by default; Thermal (60 Hz): Main stream: 1 fps–30 fps, 25 fps by default; Sub stream: 1 fps–30 fps, 15 fps by default; Visible (60 Hz): Main stream: 1 fps–30 fps, 25 fps by default; Sub stream: 1 fps–30 fps, 15 fps by default
Audio Compression	G.711a; G.711mu; PCM; AAC

Network

Protocol	HTTP; HTTPS; TCP; ARP; RTSP; RTP; UDP; RTCP; SMTP; FTP; DHCP; DNS; DDNS; PPPOE; IPv4/v6; SNMP; QoS; UPnP; NTP; Multicast; SFTP; 802.1x
Edge Storage	Micro SD card (256 G)
Interoperability	ONVIF; CGI; DaHua SDK
Browser	IE: IE11 and later (including the browsers with IE kernel, such as 360 Explorer, Sougou Explorer) Chrome: 65 and later Firefox: 65 and later
User/Host	12
Security	Authorized username and password; attached MAC address; HTTPS; IEEE 802.1x; controlled network access

Port

Network	1 × RJ-45 (10/100 Base-T)
Audio Input	1
Audio Output	1
Alarm Input	2
Alarm Output	2
RS-485	1 pair
Local Audio	White light alarm prompts, red and blue light alarm prompts

Power

Power Supply	12 (±20%)–24 VDC; PoE (802.3af)
Power Consumption	Basic: <5.3 W (12 VDC; illuminator off; speaker off; red and blue light off; power output off); 6.5 W (PoE, without power output function) Max: <12 W (12 VDC; illuminator on; speaker on; red and blue light on; power output on); 11.5 W (PoE, without power output function)
Power Output	12 VDC; ≤0.15 A (supported when the device is powered by DC, not supported when powered by POE)

Environment

Operating Temperature	–40 °C to +65 °C (–40 °F to +149 °F)
Storage Temperature	–40 °C to +70 °C (–40 °F to +158 °F)
Operating Humidity	≤95%
Protection	IP67; IK10-rated housing
Anticorrosive Coating	Neutral salt spray test 240 h
Anti-corrosion Level	Basic Protection *The products are designed for general use in areas that have no specific requirements for anti-corrosion protection.

Structure

Product Dimensions	233 mm × 97.6 mm × 99.8 mm (9.18" × 3.84" × 3.93") (L × W × H)
Packaging Dimensions	337 mm × 146 mm × 136 mm (13.27" × 5.75" × 5.35") (L × W × H)
Net Weight	≤1.1 kg (2.43 lb)
Gross Weight	≤1.4 kg (3.09 lb)

Heat (Fire) Detection Distance

Focal Length	Max. Distance
3.5 mm	45 m (147.64 ft)
7 mm	86 m (282.15 ft)
10 mm	123 m (403.54 ft)

Note:
The table displays the measured distances obtained from using the target size 0.2 m × 0.2 m for testing in an environment where the temperature is 23 °C and the relative humidity is below 60%.
The table is for reference only. The distances within it are subject to actual conditions including atmospheric conditions, target size, the installation site, and more.
Supports up to 16 fire points detectable.

Perimeter Protection Distance (IVS Distance)

Focal Length	Distance (Human)	
	General	Large-Scale AI Models
3.5 mm	35 m (114.83 ft)	45.5 m (149.28 ft)
7 mm	70 m (229.66 ft)	91 m (298.56 ft)
10 mm	100 m (328.08 ft)	130 m (426.51 ft)
	Distance (Vehicle)	
	General	Large-Scale AI Models
3.5 mm	105 m (344.49 ft)	—
7 mm	210 m (688.98 ft)	—
10 mm	300 m (984.25 ft)	—

Note:
The table displays the optimal distance obtained from using the target sizes 1.8 m × 0.5 m (human) and 4 m × 1.4 m (vehicle) for testing in an environment where the temperature is 23 °C and the relative humidity is below 60%.
The table is for reference only. The distances within it are subject to actual conditions including atmospheric conditions, target size, the installation site, and more.
General: For the short range scene, select general mode, which is better for the classification of human, vehicles, and small targets.
High Sensitivity: In scene of perimeter detection, when the scene needs to be detected at a distance of 10 times, select the high sensitivity mode.

DRI Dsitance

Focal Length	Detection Distance①	Recognition Distance②	Identification Distance③
3.5 mm	Vehicle: 447 m (1,466.54 ft); Human: 146 m (479.00 ft)	Vehicle: 112 m (367.45 ft); Human: 36 m (118.11 ft)	Vehicle: 56 m (183.73 ft); Human: 18 m (59.06 ft)
7 mm	Vehicle: 894 m (2,933.07 ft); Human: 292 m (958.01 ft)	Vehicle: 224 m (734.91 ft); Human: 73 m (239.50 ft)	Vehicle: 112 m (367.45 ft); Human: 36 m (118.11 ft)
10 mm	Vehicle: 1,278 m (4,192.91 ft); Human: 417 m (1,368.11 ft)	Vehicle: 319 m (1,046.59 ft); Human: 104 m (341.21 ft)	Vehicle: 160 m (524.93 ft); Human: 52 m (170.60 ft)

①Detection Distance: Detects objects, but cannot recognize their characteristics (objects must cover more than 1.5 pixels of the image).
②Recognition Distance: Classifies objects into general categories, such as human, vehicle (the object must cover more than 6 pixels of the image).
③Identification Distance: Classifies objects into specific categories based on their characteristics, such as engineering truck, car (the object must cover more than 12 pixels of the image).

Note:
The table is the standard theoretical calculation and is for reference only. The distances within it are subject to actual conditions including atmospheric conditions, target size, the installation site, and more. For the intelligent detection distance, refer to the table of Perimeter Protection Distance (IVS Distance) above.

Ordering Information

Type	Model	Description
Thermal Camera	DHI-TPC-BF1241-LB3F4-DW-S8-V1	Thermal: 256 × 192 3.5 mm lens Visible: 4 MP 4 mm lens
	DHI-TPC-BF1241-LB7F6-DW-S8-V1	Thermal: 256 × 192 7 mm lens Visible: 4 MP 6 mm lens
	DHI-TPC-BF1241-LB10F12-DW-S8-V1	Thermal: 256 × 192 10 mm lens Visible: 4 MP 12 mm lens
Accessories (Optional)	PFA157	Pole-mount Bracket
	PFA130-E	Junction Box
	PFM320D	Power Adapter

Accessories

Optional:



PFA157
Pole-mount bracket



PFA130-E
Junction box



PFM320D
Power adapter

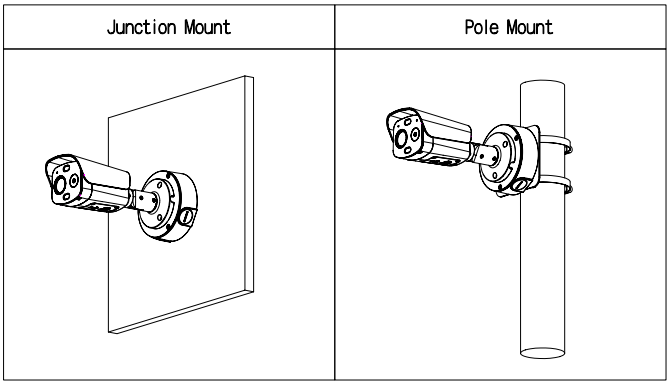

Dimensions (mm [inch])

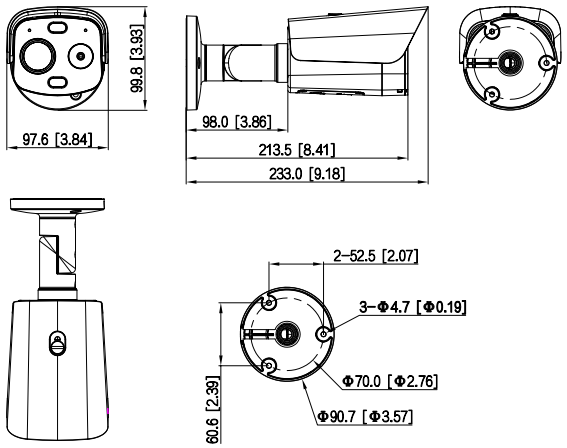

Rev 002.000 © 2026 Dahua. All rights reserved. Design and specifications are subject to change without notice.
The images, specifications and information mentioned in the document are only for reference, and might differ from the actual product.