DH-PFB1210W

Plastic Wall Mount Bracket



· Built of ABS material, it is highly durable and cost-effective.
· Lightweight and easy to dismantle.
· Small and stylish, it is suitable for installation indoors.
· Compatible with a variety of Wi-Fi PTZ cameras such as the H3B and H3D-3F models.



Series Overview

Dahua Mounting Bracket works with front-end services, supporting installation methods such as wall mount, pole mount, corner mount and in-ceiling mount. Select brackets are designed to suit complex scenes, making them convenient to use in environments with high temperatures, humidity, frequent vibrations, and in locations that are highly corrosive. These highly reliable brackets are easy to install and use.

Scene

Ideal for mounting cameras, and works in temperatures ranging from –40 °C to +60 °C (–40 °F to +140 °F) and in environments with a relative humidity of less than 90%.

Technical Specification

Structure

Casing Material	ABS
Product Dimensions	130.0 mm × 109.9 mm × 45.2 mm (5.12" × 4.33" × 1.78") (L × W × H)
Appearance Color	White
Net Weight	0.04 kg (0.09 lb)
Gross Weight	0.06 kg (0.13 lb)
Load Bearing	0.5 kg (1.10 lb)
Installation	Wall mount
Applicable Model	Please see "Camera Accessories Selection"

Environment

Operating Temperature	–40 °C to +60 °C (–40 °F to +140 °F)
Operating Humidity	<90% (RH)
Storage Temperature	–40 °C to +60 °C (–40 °F to +140 °F)
Storage Humidity	10%–90% (RH)

Ordering Information

Type	Model	Description
Camera Mount	DH-PFB1210W	Plastic Wall Mount Bracket

Installation

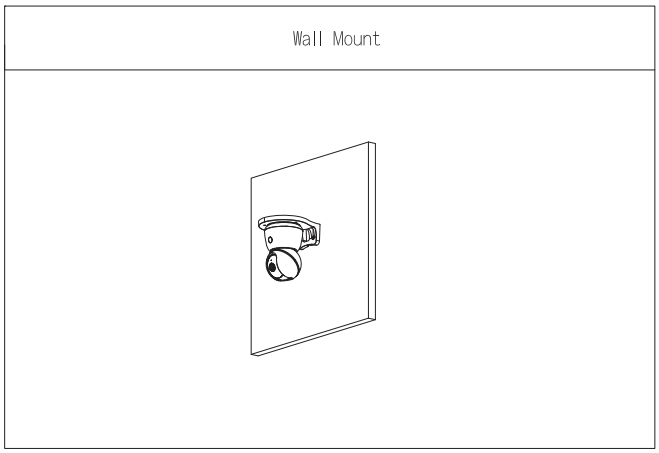

Dimensions (mm[inch])

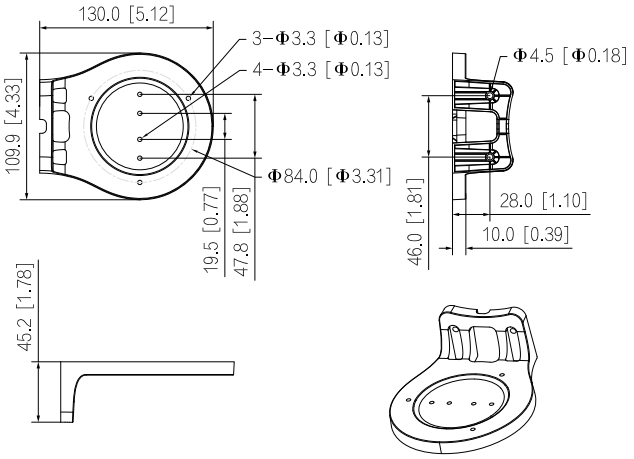

Package Information

- Plastic wall mount bracket × 1
- Mounting sticker × 1
- ST4×25 screw × 2
- Plastic expansion bolt × 2
- ST4×10 screw × 3

Rev 002.000 © 2024 Dahua. All rights reserved. Design and specifications are subject to change without notice.
The images, specifications and information mentioned in the document are only for reference, and might differ from the actual product.