DH-PFB7320W-SG

Wall Mount Bracket



- Made from stainless steel, it is highly durable with a simple yet elegant design.
- Highly compatible, it can be used with PTZ cameras and thermal imaging devices.
- Exclusive port for easy debugging and maintenance.



System Overview

Dahua Mounting Bracket works with front-end services, supporting installation methods such as wall mount, pole mount, corner mount and in-ceiling mount. Select brackets are designed to suit complex scenes, making them convenient to use in environments with high temperatures, humidity, frequent vibrations, and in locations that are highly corrosive. These highly reliable brackets are easy to install and use.

Scene

Ideal for mounting cameras, and works in temperatures ranging from –40 °C to +60 °C (–40 °F to +140 °F) and in environments with a relative humidity of less than 90%.

Technical Specification

Structure

Casing Material	Stainless steel
Product Dimensions	390.3 mm × 161.5 mm × 116.5 mm (15.37" × 6.36" × 4.59") (L × W × H)
Appearance Color	Silver gray
Net Weight	3.38 kg (7.45 lb)
Gross Weight	4.01 kg (8.84 lb)
Load Bearing	12.0 kg (26.46 lb)
Installation	Wall mount
Screw Thread Type	G1-1/2
Applicable Model	Please see "Camera Accessories Selection"
Packaging Dimensions	447.0 mm × 240.0 mm × 233.0 mm (17.60" × 9.45" ×9.17") (L × W × H)

Environment

Operating Temperature	–40 °C to +60 °C (–40 °F to +140 °F)
Operating Humidity	<90% (RH)
Storage Temperature	–40 °C to +60 °C (–40 °F to +140 °F)
Storage Humidity	10%–90% (RH)
Anti-corrosion Level	Basic Protection

Ordering Information

Type	Model	Description
Bracket	DH-PFB7320W-SG	Wall Mount Bracket

Installation

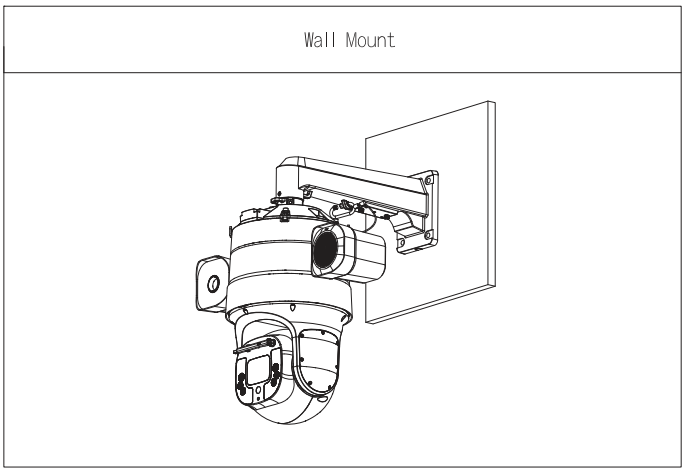

Dimensions (mm[inch])

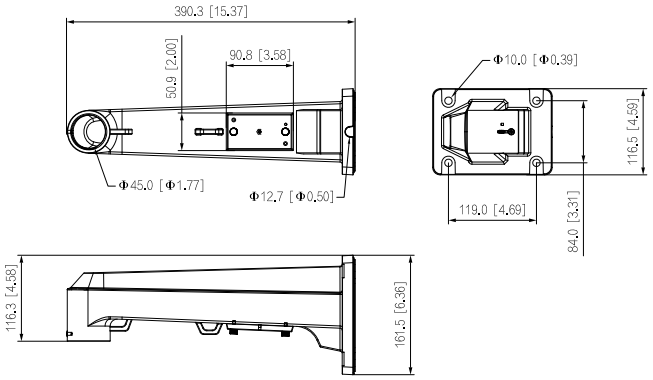

Package Information

- Wall Mount Bracket × 1

Rev 002.000 © 2023 Dahua. All rights reserved. Design and specifications are subject to change without notice.
The images, specifications and information mentioned in the document are only for reference, and might differ from the actual product.