DH-PFA138

Water-proof Junction Box



Features

- Material: aluminum
- Water-proof junction box
- Aesthetic design
- Safety rope hook attached, secure and reliable

Technical Specifications

Model	DH-PFA138
General	
Material	Aluminum
Dimension	Φ161x37mm (Φ6.34"x1.46")
Inch Thread	G3/4"
Weight	0.48kg(1.06lb)
Load Bearing	3.0kg(6.61lb)
Color	White
Operating Temperature	-40°C~+60°C(-40℉~+140℉)
Humidity	<90% RH
Applicable Model	Please see "Accessory Selection"

Order Information

Type	Part Number	Description
Camera Mount	DH-PFA138	Water-proof junction box
	PFA138	Water-proof junction box

Dimensions (mm/inch)

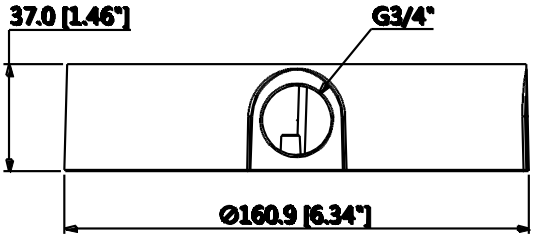

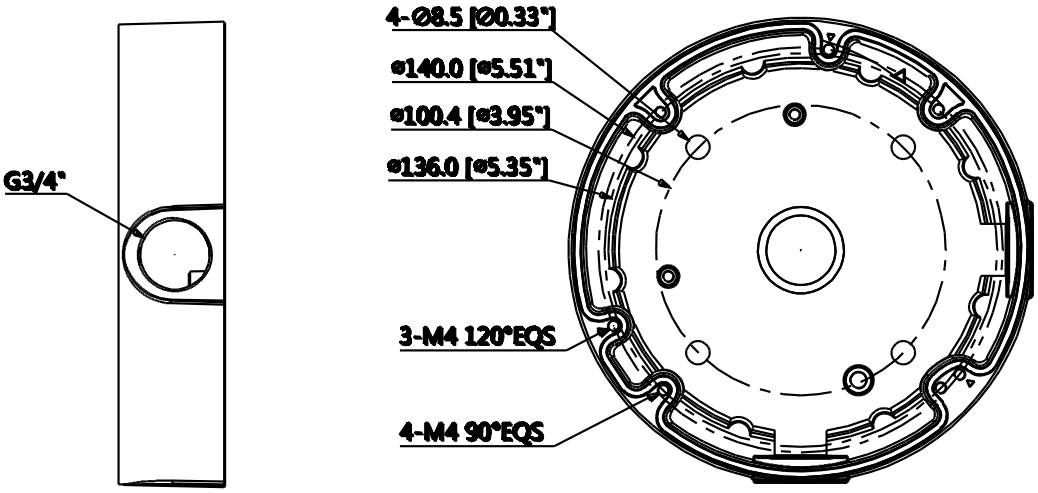

Application

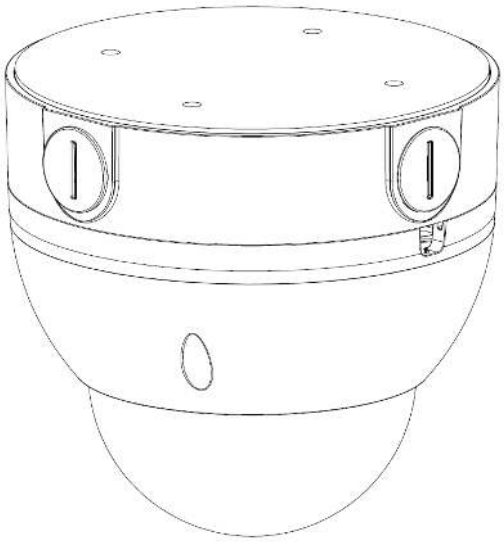

Package Information

- Water-proof junction box *1
- M4x14 screw *4
- Plastic anchor *4
- ST6x45 screw *4
- Wrench *1
- Safety rope *1

© 2018 Dahua. All rights reserved. Design and specifications are subject to change without notice.