PFA122

Water-proof Junction Box



Features

- Material: Aluminum
- IP66 Junction Box
- Neat & Integrated design

Specifications

Model	**PFA122**
General	
Material	Aluminum
Dimension (W x D x H)	134mm x 134mm x 55mm
Pipe Thread	M20(G1/2")
Operating Temperature	-40°C ~60°C
Humidity	0~90% RH
Load Bearing	3.0Kg
Weight	0.55Kg
Applicable Model	Please see "Accessory Selection"

PFA122

Dimensions (mm)

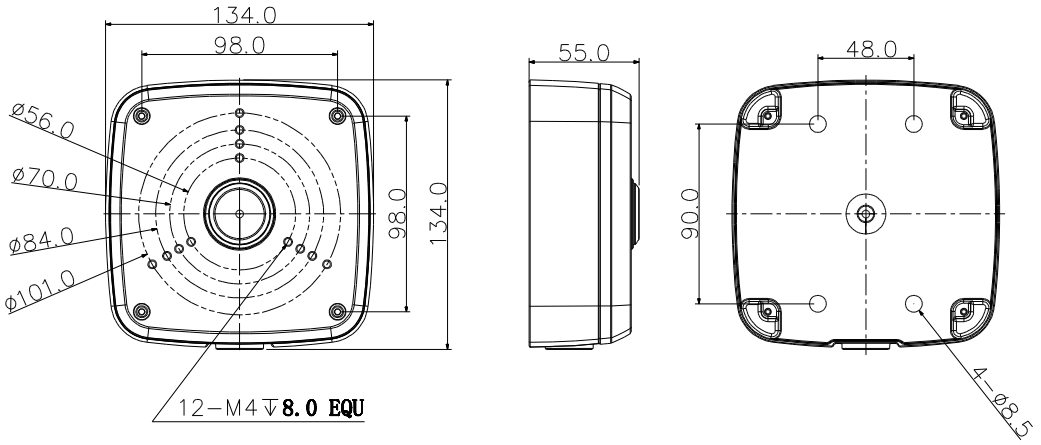

Application

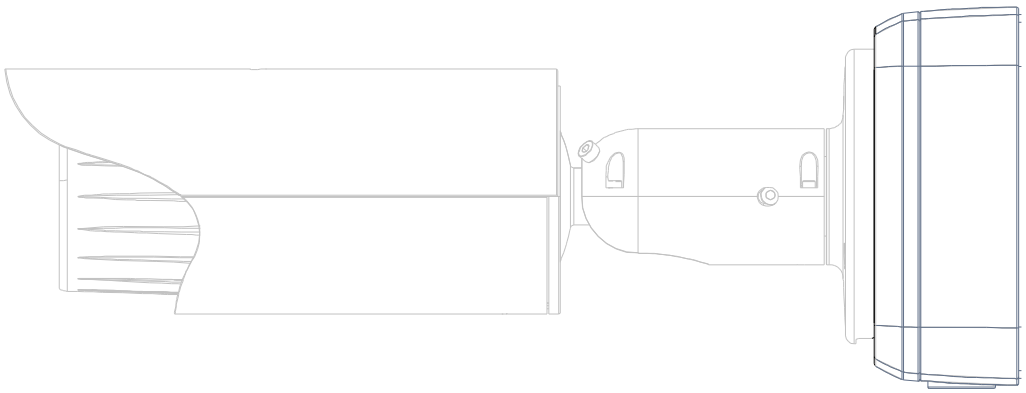

Dahua Technology Co., Ltd.

1199 BinAn Road, Binjiang District, Hangzhou, China

Tel: +86-571-87688883

Fax: +86-571-87688815

Email: overseas@dahuatech.com

www.dahuasecurity.com

*Design and specifications are subject to change without notice.

© 2014 Dahua Technology Co., Ltd.