DH-IPC-HDPW5441C-AS-PV

4MP IR Fixed-focal Dome WizMind Network Camera



Launched by Dahua Technology, Dahua WizMind is a full portfolio of solutions composed of project-oriented products including IPC, IVSS,NVR, PTZ, XVR, Thermal and software platform which adopts industry-leading deep learning algorithms. Focusing on customer's requirements, WizMind provides precise, reliable and comprehensive AI solutions for verticals.

Series Overview

With starlight solution and deep learning algorithm, Dahua WizMind 5 Series network camera has various intelligent functions, including face capture, perimeter protection and people counting, which greatly improve the accuracy of video analysis. The series camera supports dust-proof function, waterproof function and vandal-proof function, complying with the standards of IP67 and IK10 (Supported by some select models).

Functions

WDR

With advanced Wide Dynamic Range (WDR) technology, Dahua network camera provides clear details in the environment of strong brightness contrast. The bright and dark area can get clear video even in high brightness environment or with backlight shadow.

Face Detection

Dahua Face Detection technology can detect the face in the image. With deep learning algorithm, the technology supports detecting, tracking, capturing and selecting the best face image, and then outputs face snapshot.

- 4-MP 1/2.9" CMOS image sensor, low luminance, and high definition image.
- Outputs max. 4 MP (2688 × 1520) @25/30 fps.
- H.265 codec, high compression rate, ultra-low bit rate.
- Built-in warm light and IR LED, and the max. IR distance is 10 m.
- Rotation mode, WDR, 3D NR, HLC, BLC, digital watermarking, applicable to various monitoring scenes.
- Alarm: 4 in, 1 out; audio: 1 in, 1 out; RS-485; supports max. 256 G Micro SD card; built in Mic; built in speaker.
- 12 VDC/PoE power supply, 12 VDC power output, max. current 165 mA, and peak current 700 mA, easy for installation.
- The built-in floor sensor supports floor monitoring, height measurement, and floor configuration to prevent mopeds from entering the elevator.
- The embedded speed sensor monitors elevator behavior, including speed, upward and downward movement, and stopping status. It also triggers alarms if the elevator is moving too quickly.
- The attitude sensor supports three-axis attitude detection for the elevator, triggering alarms when it behaves abnormally.
- The temperature sensor continuously monitors temperature levels in real time, displaying readings and triggering alarms for any abnormal temperatures detected.
- Monitors brightness levels while displaying information on the lighting conditions inside the elevator in real time.
- Features elevator fault detection, addressing incidents such as moving with doors open, stopping at non-level positions, and collisions with the top or bottom of the elevator shaft.



In Area No.

With advanced stereo image technology and deep learning algorithm, Dahua In Area No. technology recognizes human targets accurately to count people in area in real-time. You can set people quantity threshold, when the number larger or smaller than the threshold, it triggers linkage. It is applicable in the scene that has limit on people quantity.

Protection (Wide Voltage)

Wide voltage: The camera allows ±30% (for some power supplies) input voltage tolerance (wide voltage range), and it is widely applied to outdoor environment with instable voltage.

Technical Specification

Camera

Image Sensor	1/2.9" CMOS
Max. Resolution	2688 (H) × 1520 (V)
ROM	256 MB
RAM	512 MB
Scanning System	Progressive
Electronic Shutter Speed	Auto/Manual 1/3 s–1/100,000 s
Min. Illumination	0.005 lux@F1.6 (Color, 30 IRE) 0.0005 lux@F1.6 (B/W, 30 IRE) 0 lux (Illuminator on)
S/N Ratio	>56 dB
Illumination Distance	2.1 mm: Up to 10 m (32.81 ft) (IR)
Illuminator On/Off Control	Auto
Illuminator Number	1 (IR LED); 1 (Warm light)
Angle Adjustment	Pan: –20° to 20°; Tilt: 0° to 65°

Lens

Lens Type	Fixed-focal
Lens Mount	M12
Focal Length	2.1 mm
Max. Aperture	F1.6
Field of View	2.1 mm: H: 130°; V: 69°; D: 155°
Iris Control	Fixed
Close Focus Distance	2.1 mm: 0.8 m (2.62 ft)

DORI Distance

Lens	Detect	Observe	Recognize	Identify
2.1 mm	50.6 m (166.01 ft)	20.2 m (66.27 ft)	10.1 m (33.14 ft)	5.1 m (16.73 ft)

*DORI (Detect, Observe, Recognize, Identify) is a standard system (EN-62676-4) for defining the ability of a person viewing the video to distinguish persons or objects within a covered area. The numbers in this table do not reflect intelligent function distances. For intelligent function distances, refer to installation and commissioning manual/project design tool.

Intelligence

Face Detection	Face detection; track; snapshot; snapshot optimization; optimal face snapshot upload; face exposure; face attributes extraction including 6 attributes and 8 expressions; face snapshot set as face or one-inch photo; snapshot strategies (real-time snapshot, quality priority and optimization snapshot); face angle filter; optimization time setting.
People Counting	Tripwire people counting and people counting in area; generating and exporting report (day/month/year); queue management; 4 rules can be set for tripwire, people counting in area and queue management.
Elevator Detection	Speed detection; attitude detection; temperature detection; brightness detection; fault detection
Smart Search	Work together with Smart NVR to perform refine intelligent search, event extraction and merging to event videos

Video

Video Compression	H.265; H.264; H.264H; H.264B; MJPEG (Only supported by sub stream)
Video Frame Rate	Main stream: 2688 × 1520@(1–25/30 fps) sub stream: 704 × 576@(1–25 fps)/704 × 480@(1–30 fps) third stream: 1920 × 1080@(1–25/30 fps) *The values above are the max. frame rates of each stream; for multiple streams, the values will be subjected to the total encoding capacity.
Streaming Capability	3 streams
Resolution	4M (2688 × 1520/2560 × 1440); 3M (2048 × 1536/2304 × 1296); 1080p (1920 × 1080); 1.3M (1280 × 960); 720p (1280 × 720); D1 (704 × 576/704 × 480); CIF (352 × 288/352 × 240); VGA (640 × 480)
Bit Rate Control	CBR/VBR
Video Bit Rate	H.264: 3 kbps–16384 kbps; H.265: 3 kbps–16384 kbps
Day/Night	Auto(ICR)/Color/B/W
BLC	Yes
HLC	Yes
WDR	120 dB
Scene Self-adaptation (SSA)	Yes
White Balance	Auto; natural; street lamp; outdoor; manual; regional custom
Gain Control	Auto
Noise Reduction	3D NR
Motion Detection	OFF/ON (4 areas, rectangular)
Region of Interest (RoI)	Yes (4 areas)
Image Rotation	0°/90°/180°/270° (Support 90°/270° with 2688 × 1520 resolution and lower)
Mirror	Yes
Privacy Masking	4 areas
LDC	Yes

Audio

Built-in MIC	Yes, built-in Mic
Built-in Speaker	Yes, built-in speaker
Audio Compression	PCM; G.711a; G.711Mu; G.726; G.723

Alarm

Alarm Event	No SD card; SD card full; SD card error; network disconnection; IP conflict; illegal access; motion detection; video tampering; ToF occlusion; scene changing; audio detection; intensity change; voltage detection; external alarm; moped in elevator; face detection; people counting in area; stay detection; people counting; people number error detection; repeated opening and closing; people trapped detection

Network

Network Port	RJ-45 (10/100 Base-T)
SDK and API	Yes
Network Protocol	IPv4; IPv6; HTTP; TCP; UDP; ARP; RTP; RTSP; RTCP; RTMP; SMTP; FTP; SFTP; DHCP; DNS; DDNS; QoS; UPnP; NTP; Multicast; PPPoE; SNMP; P2P; Bonjour; Auto Registration
Interoperability	ONVIF (Profile S&Profile G&Profile T); CGI
User/Host	20 (Total bandwidth: 64 M)
Storage	FTP; SFTP; Micro SD card (support max. 256 GB); NAS
Browser	IE: IE8, IE9, and IE11; Chrome; Firefox
Mobile Client	iOS;Android
Security	Digest;WSSE;Account lockout;Security logs;IP/MAC filtering;Generation and importing of X.509 certification;syslog;HTTPS;802.1x;Trusted boot;Trusted execution;Trusted upgrade;Session security;Security warning

Certification

Certifications	CE-LVD: EN62368-1; CE-EMC: Electromagnetic Compatibility Directive 2014/30/EU;

Port

RS-485	1 (baud rate range: 1200 bps–115200 bps)
Alarm Input	4 channels in: wet contact, 5 mA 3–5 VDC
Alarm Output	1 channel out: dry contact, 1,000 mA 30 VDC/500 mA 50 VAC
Power Output	12 VDC power output, max. current 165 mA, peak current 700 mA

Power

Power Supply	12 VDC; PoE (802.3af)
Power Consumption	Basic: 3.3 W (12 VDC); 4.2 W (PoE); Max.: 6.6 W (12 VDC); 7.5 W (PoE) (H.265 + IR on + WDR + intelligence on + siren and light active deterrence)

Environment

Operating Temperature	–40 °C to +50 °C (–40 °F to +122 °F)
Operating Humidity	≤95% (RH), non-condensing
Storage Temperature	–40 °C to +50 °C (–40 °F to +122 °F)
Storage Humidity	≤95% (RH), non-condensing
Anti-corrosion Level	Basic Protection

Structure

Casing Material	Metal + plastic
Product Dimensions	62 mm × Φ106 mm (2.44" × Φ4.17")
Net Weight	0.33 kg (0.73 lb)
Gross Weight	0.45 kg (0.99 lb)

Ordering Information

Type	Model	Description
IP CAMERA	DH-IPC-HDPW5441C-AS-PV	4MP IR Fixed-focal Dome WizMind Network Camera
Accessories (Optional)	DH-PFA106	Mount Adapter
	DH-PFB220C	Ceiling Mount Bracket
	DH-PFA151	Corner Mount Bracket
	DH-PFB305W	Wall Mount Bracket
	DH-PFA150	Pole Mount Bracket
	DH-PFA152-E	Pole Mount Bracket
	DH-PFB2204W	Wall Mount Bracket
	DH-PFA139	Junction Box
	DH-PFM321-EN	DC12V1A power adapter
	DH-PFM320D-EN	DC12V2A power adapter
	PFM900-E	Integrated Mount Tester
	DHI-TF-W100-256GB	MicroSD Card
	DHI-TF-P100/256GB	MicroSD Card

Accessories

Optional:



DH-PFA106
Mount Adapter



DH-PFA139
Junction Box



DH-PFA150
Pole Mount Bracket



DH-PFA151
Corner Mount Bracket



DH-PFA152-E
Pole Mount Bracket



DH-PFB2204W
Wall Mount Bracket



DH-PFB220C
Ceiling Mount Bracket



DH-PFB305W
Wall Mount Bracket



DH-PFM320D-EN
DC12V2A power adapter

Optional:



DH-PFM321-EN
DC12V1A power adapter



DHI-TF-P100/256GB
MicroSD Card



DHI-TF-W100-256GB
MicroSD Card



PFM900-E
Integrated Mount Tester

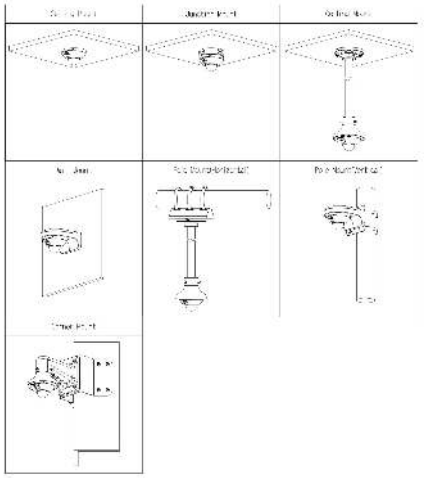

Dimensions (mm[inch])

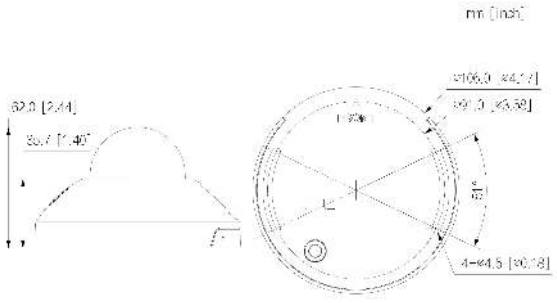

© 2025 Dahua. All rights reserved. Design and specificatons are subject to change without notce.
Pictures in the document are for reference only, and the actual product shall prevail.