DH-PSDW8852S-A180-D440

8 MP Multi-Sensor 180° Panoramic PTZ Mini Hubble WizMind Network Camera



Xinghan WizMind

Launched by Dahua Technology, Dahua WizMind is a full portfolio of solutions composed of project-oriented products including IPC, NVR, PTZ, XVR, Thermal and software platform which adopts industry-leading deep learning algorithms. Focusing on customer's requirements, WizMind provides precise, reliable and comprehensive AI solutions for verticals.

Series Overview

The Hubble WizMind Network Camera features an integrated design and multi-sensor fusion technology, enabling it to deliver panoramic coverage and capture ultra-HD detail images. Equipped with Xinghan Large-Scale AI Models for situational analysis, the camera performs precise analytics of the crowd distribution map in large-scale scenarios. It also supports perimeter protection, vehicle density, and boat detection. Additionally, the panoramic and detail cameras can be linked to enable tracking with close-ups. This makes it ideal for use at transit stations, public squares and compounds, enhancing the speed and efficiency of incident responses while bolstering security to meet the digital management needs of government agencies and enterprises.

Functions

Xinghan Large-Scale AI Models-Vision

Xinghan Large-Scale AI Models-Vision seamlessly expands the storage and operational capacity of algorithmic models through the powerful integration of edge AI model algorithms and NPU computing power. Engineered with a lightweight transformer architecture and enhanced by model distillation and quantization techniques, it optimizes the computing power consumption of ViT operators. This enables the system to collaborate on multiple tasks simultaneously through joint inference between small and large models optimized for edge devices.

Crowd Density

Detects the number of people and the level of crowd density within an area. It adopts the Xinghan Large-Scale AI Model-Vision technology, enabling it to identify smaller pixels than standard devices and recognize people carrying umbrellas even in low-light conditions. This greatly improves the accuracy of crowd statistics at night and in rainy scenes.

Flexible Splicing

Seamlessly splices two or more adjacent camera sensors, effectively resolving occlusion issues in installation scenarios.

- Channel 1 (Panoramic): 4 × 2 MP 1/1.8" CMOS image sensors.
- Channel 2 (PTZ): 1 × 4 MP 1/1.8" CMOS image sensors.
- Channel 2 (PTZ): Optical Zoom: 40×, Digital Zoom: 16×.
- Channel 2 (PTZ): Gyroscope Image Stabilization (GIS);Optical defog.
- Channel 2 (PTZ): Built-in Multi-core (IR + warm) light, max. IR illumination distance: 150 m. Max. Warm light illumination distance: 100 m
- Channel 1 (Panoramic): Four switchable intelligent resources: Perimeter protection, Crowd map (Large-Scale AI Models), Vehicle density, Boat detection.
- Channel 2 (PTZ): Three switchable intelligent resources: Perimeter protection, Video metadata, Face detection.
- AR panorama technology; various AR tags can be overlaid.
- G-sensor; gradienter; flexible splicing; flexible cutting; smart tracking.
- Built-in dual Mic and single speaker.
- Alarm: 3 in, 2 out; audio: 2 in, 1 out; 1 channel BNC, 1 channel RS–485 (baud rate can be set). supports max. 1 TB SD card.
- 1 network port (RJ-45).
- 36 VDC or PoE ++(802.3bt) power supply, 12 VDC power output, and max. current 165 mA, easy for installation.
- IP67, IK10 protection.



AR Panorama

Dahua AR panorama technology generates wide-field of view through panoramic merging and splicing. The software overlaps the cameras as tags in the image. Click the tag to display the corresponding camera video, which makes monitoring visual and convenient, and improves command efficiency.

Smart Tracking

With advanced algorithm, Dahua network camera can detect targets, track targets with speed dome, and view details.

Video Metadata

With deep learning algorithm, Dahua Video Metadata technology can detect, track, capture vehicle, non-motor vehicle and people, and select the best images, and extract attributes.

Face Detection

Dahua Face Detection technology can detect the face in the image. With deep learning algorithm, the technology supports detecting, tracking, capturing and selecting the best face image, and then outputs face snapshot.

Protection (IP67, IK10)

IP67: The camera passes a series of strict test on dust and soak. It has dust-proof function, and the enclosure can work normally after soaking in 1 m deep water for 30 minutes.

IK10: The enclosure can stand the punch more than 5 times from a 5 kg hammer falling from a height of 40 cm (Impact energy is 20J).

Technical Specification

Camera

Image Sensor	Channel 1 (Panoramic): 1/1.8" CMOS Channel 2 (PTZ): 1/1.8" CMOS
Max. Resolution	Channel 1 (Panoramic): 4096 (H) × 1800 (V) Channel 2 (PTZ): 2688 (H) × 1520 (V)
ROM	Channel 1 (Panoramic): 8 GB Channel 2 (PTZ): 4 GB
RAM	Channel 1 (Panoramic): 4 GB Channel 2 (PTZ): 2 GB
Scanning System	Progressive
Electronic Shutter Speed	Auto/Manual 1/3 s–1/100,000 s
Min. Illumination	Channel 1 (Panoramic): 0.0005 lux@F1.0 (Color, 30 IRE) 0.0001 lux@F1.0 (B/W, 30 IRE) Channel 2 (PTZ): 0.001 lux@F1.6 (Color, 30 IRE) 0.0001 lux @F1.6 (B/W, 30 IRE) 0 lux (Illuminator on)
S/N Ratio	>56 dB
Illumination Distance	Channel 1 (Panoramic): NA Channel 2 (PTZ): Up to 150 m (492.13 ft)(IR); Up to 100 m (328.09 ft)(Warm light)
Illuminator On/Off Control	Auto; Manual; Zoomprio
Illuminator Number	Channel 1 (Panoramic): NA Channel 2 (PTZ): 6 (Multi-core (IR + warm) light)
Angle Adjustment	Pan: 0° to 360° ; Tilt: –10° to 180°, auto flip 180°
Gradienter	Yes

Lens

Lens Type	Channel 1 (Panoramic): Fixed-focal Channel 2 (PTZ): Vari-focal
Lens Mount	Channel 1 (Panoramic): M16 Channel 2 (PTZ): Module
Focal Length	Channel 1 (Panoramic): 2.8 mm Channel 2 (PTZ): 5.2 mm–210 mm
Max. Aperture	Channel 1 (Panoramic): F1.0 Channel 2 (PTZ): F1.6–F5.0
Field of View	Channel 1 (Panoramic): H: 180°; V: 103°; Channel 2 (PTZ): H: 60.8°–2.8°; V: 35.9°–1.7°; D: 67.7°–3.3°
Iris Control	Channel 1 (Panoramic): Fixed Channel 2 (PTZ): Auto
Close Focus Distance	Channel 1 (Panoramic): 1.4 m (4.59 ft) Channel 2 (PTZ): 0.5 m (1.64 ft)

	Lens	Detect	Observe	Recognize	Identify
DORI Distance	Channel 1 (Panoramic)	57.9 m (189.96 ft)	23.2 m (76.11 ft)	11.6 m (38.06 ft)	5.8 m (19.03 ft)
	Channel 2 (PTZ)	2648.2 m (8688.32 ft)	1046.1 m (3432.09 ft)	530.0 m (1738.85 ft)	264.8 m (868.77 ft)
	*DORI (Detect, Observe, Recognize, Identify) is a standard system (EN-62676-4) for defining the ability of a person viewing the video to distinguish persons or objects within a covered area. The numbers in this table do not reflect intelligent function distances. For intelligent function distances, refer to installation and commissioning manual/project design tool.				

Intelligence

Intelligence Notes	Channel 1 (Panoramic): Perimeter protection, crowd map (Large-Scale AI Models), vehicle density, boat detection. Channel 2 (PTZ): Perimeter protection, video metadata, face detection.
IVS (Perimeter Protection)	Channel 1 (Panoramic): Tripwire; intrusion; parking detection Channel 2 (PTZ): Tripwire; intrusion; parking detection; crossing virtual fence; fast moving; abandoned object; missing object; crowd gathering; loitering detection
Face Detection	Channel 1 (Panoramic): NA Channel 2 (PTZ): Face detection; snapshot; snapshot optimization; optimal face snapshot upload; face enhancement; face exposure; face attributes extraction including 6 attributes and 8 expressions; face snapshot set as face or one-inch photo; snapshot strategies (real-time snapshot, quality priority and optimization snapshot); face angle filter; optimization time setting.
Vehicle Density	Channel 1 (Panoramic): Vehicle density; parking upper limit; traffic congestion; vehicle status alarm Channel 2 (PTZ): NA
Crowd Distribution Map	Channel 1 (Panoramic): Crowd map (Large-Scale AI Models), global crowd density; crowd density in area; people counting in area; crowd status Channel 2 (PTZ): NA
Video Metadata	Channel 1 (Panoramic): NA Channel 2 (PTZ): Motor vehicle, non-motor vehicle, face, and human body detection; snapshot; snapshot optimization; optimal face snapshot upload. Extraction of motor vehicle and non-motor vehicle attributes: extracts 6 attributes for motor vehicle and 6 attributes for non-motor vehicle Extraction of face and human body attributes: extracts 6 attributes for face and 8 attributes for human body.
Smart Search	Work together with Smart NVR to perform refine intelligent search, event extraction and merging to event videos.

Video

Video Compression	H.265; H.264; H.264H; H.264B; MJPEG (Only supported by the sub stream)
Smart Codec	Smart H.264+; Smart H.265+
Video Frame Rate	Channel 1 (Panoramic): Main stream: 4096 × 1800@(1–25/30 fps) sub stream: 1024 × 452@(1–25/30 fps) third stream: 1920 × 832@(1–25/30 fps) Channel 2 (PTZ): Main stream: 2688 × 1520@(1–25/30 fps) sub stream: 704 × 480@(1–25/30 fps) third stream: 1920 × 1080@(1–25/30 fps) *The values above are the max. frame rates of each stream; for multiple streams, the values will be subjected to the total encoding capacity.
Streaming Capability	3 streams

Resolution	Channel 1 (Panoramic): 4096 × 1800; 3840 × 1680; 2880 × 1264; 2048 × 900; 1024 × 452; 1920 × 832; 1280 × 560; Channel 2 (PTZ): 2688 × 1520; 2560 × 1440; 2304 × 1296; 1920 × 1080; 1280 × 960; 1280 × 720; 704 × 480; 640 × 480; 352 × 240
Bit Rate Control	VBR; CBR
Video Bit Rate	Channel 1 (Panoramic): H.264: 64 kbps–16384 kbps; H.265: 25 kbps–15831 kbps; Channel 2 (PTZ): H.264: 32 kbps–16384 kbps; H.265: 12 kbps–11008 kbps
Day/Night	Channel 1 (Panoramic): NA Channel 2 (PTZ): ICR
BLC	Yes
HLC	Yes
WDR	Channel 1 (Panoramic): 120 dB Channel 2 (PTZ): 120 dB
White Balance	Auto; natural; street lamp; outdoor; manual; regional custom
Gain Control	Manual; Auto
Noise Reduction	3D NR
Motion Detection	OFF/ON (4 areas, rectangular)
Region of Interest (RoI)	Channel 1 (Panoramic): Yes (4 areas) Channel 2 (PTZ): Yes (8 areas)
Image Stabilization	Channel 1 (Panoramic): NA Channel 2 (PTZ): Gyroscope Image Stabilization (GIS)
Defog	Channel 1 (Panoramic): NA Channel 2 (PTZ): Optical defog
Privacy Masking	Channel 1 (Panoramic): 4 areas (rectangle) Channel 2 (PTZ): 24 areas (8 for each preset) (polygon)

Audio

Built-in MIC	Yes, built-in dual Mic
Built-in Speaker	Yes, built-in speaker
Audio Compression	PCM; G.711a; G.711Mu; G.726; G.723, G.711a by default

Alarm

Alarm Event	Channel 1 (Panoramic): External alarm; No SD card; SD card full; SD card error; network disconnection; IP conflict; illegal access; voltage detection; motion detection; video tampering; scene changing; audio detection; intensity change; tripwire; intrusion; parking detection; crowd density; traffic congestion; parking upper limit; Channel 2 (PTZ): Tripwire; intrusion; parking detection; crossing virtual fence; fast moving; abandoned object; missing object; crowd gathering; loitering detection; face detection; video metadata

Network

Network Port	RJ-45 (10/100/1000 Base-T)
SDK and API	Yes
Network Protocol	IPv4; IPv6; HTTP; TCP; UDP; ARP; RTP; RTSP; RTCP; RTMP; SMTP; FTP; SFTP; DHCP; DNS; DDNS; QoS; UPnP; NTP; Multicast; ICMP; IGMP; NFS; SAMBA; PPPoE; SNMP; P2P
Security	WSSE; Account lockout; Trusted execution; Generation and importing of X.509 certification; 802.1x; Security logs; Digest;IP/MAC filtering; HTTPS; Trusted upgrade; syslog; Trusted boot
Interoperability	ONVIF (Profile S/Profile G/Profile T); CGI
User/Host	20 (Total bandwidth: 400 M)
Storage	FTP; SFTP; Micro SD card (support max. 1 TB); NAS; SMB
Browser	IE: IE11; Chrome; Firefox
Management Software	DSS Pro

Function

AR Function	Yes

PTZ

Pan/Tilt Range	Pan: 0° to 360° endless Tilt: –10° to 180°, auto flip 180°
Manual Control Speed	Pan: 0°/s–360°/s Tilt: 0°/s–150°/s
Preset	300
Preset Speed	Pan: 0°/s–360°/s Tilt: 0°/s–150°/s
Tour	8 (up to 32 presets per tour)
Pattern	5
Scan	5
Power-off Memory	Yes
Idle Motion	Tour;Preset; Pattern; Scan

Certification

Certifications	CE-LVD: EN62368-1; CE-EMC: Electromagnetic Compatibility Directive 2014/30/EU

Port

RS-485	1 (baud rate range: 1200 bps–115200 bps)
Audio Input	2 channels (terminal)
Audio Output	1 channel (terminal)
Alarm Input	3 channels in: wet contact, 5 mA 3–5 VDC
Alarm Output	2 channels out: dry contact, 1,000 mA 30 VDC/500 mA 50 VAC
Analog Output	1 channel (CVBS output: BNC)
Power Output	12 VDC power output, max. current 165 mA, peak current 700 mA

Power

Power Supply	36 VDC (±50%); PoE++ (802.3bt)
Power Consumption	Basic: 26.4 W (36 VDC); Max.: 67.8 W (36 VDC) (Basic power consumption + WDR + intelligence on +Speaker+Heater+ LED on + PTZ operation)

Environment

Operating Temperature	–40 °C to +70 °C (–40 °F to +158 °F)

Operating Humidity	≤95%
Storage Temperature	–40 °C to +70 °C (–40 °F to +158 °F)
Storage Humidity	≤95%
Protection	IP67; IK10

Structure

Casing Material	Metal + plastic
Product Dimensions	Φ280.0 mm × 368.0 mm (Φ11.02" × 14.49")
Net Weight	8.8 kg (19.40 lb)
Gross Weight	12.2 kg (26.90 lb)

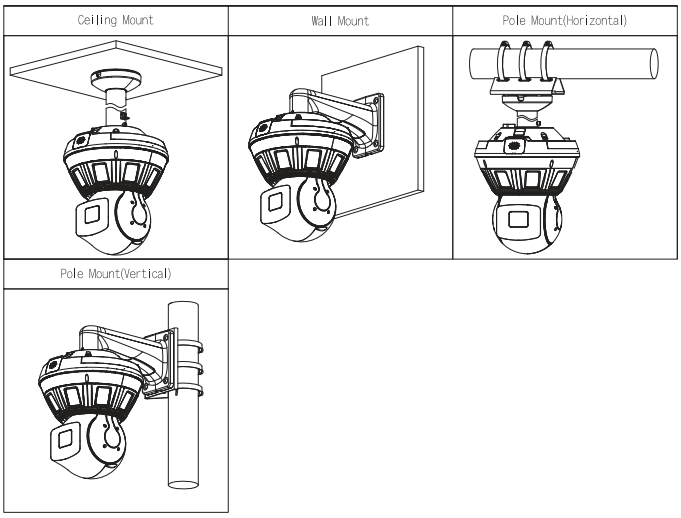

Ordering Information

Type	Part Number	Description
8MP Camera	DH-PSDW8852S-A180-D440	8 MP Multi-Sensor 180° Panoramic PTZ Mini Hubble Wizmind Network Camera
Accessories	ADS-180EL-36-1 360180E	36 VDC 5 A Power Adapter
	PFB300C-S	Ceiling Mount Bracket
	PFB5307W-SG	Wall Mount Bracket
	PFA5500-SG	Pole Mount Bracket
	TF-P100	MicroSD Memory Card

Dimensions (mm[inch])

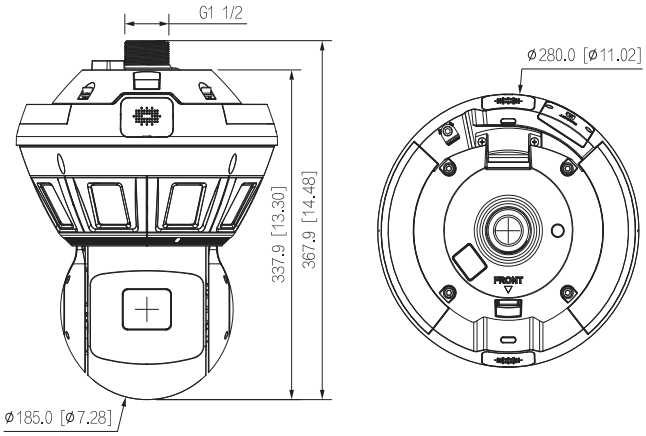

Accessories

Included:



ADS-180EL-36-1
360180E
36 VDC 5 A Power Adapter

Optional:



PFB300C-S
Ceiling Mount Bracket



PFB5307W-SG
Wall Mount Bracket



PFA5500-SG
Pole Mount Bracket



TF-P100
MicroSD
Memory Card

Rev 002.000 © 2025 Dahua. All rights reserved. Design and specifications are subject to change without notice.
The images, specifications and information mentioned in the document are only for reference, and might differ from the actual product.