DH-SD49225DB-HC

2MP 25x Starlight IR HDCVI PTZ Camera



- 1/2.8" 2Megapixel STARVIS™ CMOS.
- Powerful 25× optical zoom.
- Starlight technology.
- 120 dB true WDR, 3D NR.
- Max. 25/30 fps@1080p, 25/30/50/60 fps@720p.
- IR distance up to 100 m.
- IP66.



System Overview

With its powerful optical zoom, and accurate pan and tilt capabilities, the HDCVI PTZ camera series provides an all-in-one solution for large-scale monitoring. It harnesses the latest starlight technology, allowing it to produce highly detailed images even in low light conditions. These cameras offer smooth control and high-grade protection that enable them to meet the requirements of video surveillance in small and medium-sized scenes.

Functions

Starlight Technology

With advanced image processing technology and optical technology, Dahua Starlight technology can provide clear colorful video in the environment of low illuminance. It widely applies to various environments of low illuminance.

3DNR

Dahua's 3DNR technology reduces image noise with little to no impact on image sharpness, especially in poor lighting conditions. It detects the noise, and compares the sequential frames to effectively reduce the noise. It also makes efficient use of bandwidth, saving on storage space.

Long Distance Transmission

HDCVI technology provides long distance transmission in real time without transmission loss. It supports transmission distances up to 300m for 2MP HD videos through coaxial cables, and up to 200m through UTP cables.

*The results were obtained and verified through rigorous testing in Dahua's test laboratory.

3 Signals over 1 Coaxial Cable

HDCVI technology supports 3 signals (video, audio* and data) which are simultaneously transmitted over a coaxial cable. Dual-way data transmission allows the HDCVI camera to interact with the XVR to perform various actions such as sending control signals and triggering alarms.

* Audio input is available for select HDCVI camera models.

Wide Dynamic Range

The camera produces vivid images, even in high-contrast lighting conditions, by using industry-leading wide dynamic range (WDR) technology. For scenes that quickly alternate between bright and low lighting, WDR adjusts to fully capture both the bright and dark areas of a scene, producing superior quality videos.

PFA Technology

PFA technology has introduced new methods of judgment that ensure the accuracy and predictability of the direction of subject distance adjustment. The result is a set of advanced focusing algorithms that ensure image clarity when zooming and that shorten focus time. This makes the camera highly advanced in its functions, substantially improving the quality of your experience.

Protection (IP66, TVS 6000 V)

IP66, TVS 6000 V lightning proof, surge protection, and voltage transient protection.

Technical Specification

Camera

Image Sensor	1/2.8" CMOS
Pixel	2 MP
Max. Resolution	1920 (H) × 1080 (V)
ROM	128 MB
RAM	256 MB
Electronic Shutter Speed	1/3 s–1/30,000 s
Scanning System	Progressive
Min. Illumination	0.005 lux@F1.6 (Color, 30 IRE); 0.0005 lux@F1.6 (B/W, 30 IRE) 0 lux (IR light)
Illumination Distance	100 m (328.08 ft) (IR)
Illuminator On/Off Control	Zoom Prio; manual
Illuminator Number	6 (IR)

Lens

Focal Length	4.8 mm–120 mm			
Max. Aperture	F1.6–F3.5			
Field of View	H: 60.6°–3.2°; V: 34.1°–1.8°; D: 69.4°–3.7°			
Optical Zoom	25×			
Focus Control	Auto; semi-auto; manual			
Close Focus Distance	0.1 m–2 m (0.33 ft–6.56 ft)			
Iris Control	Auto; manual			
DORI Distance	Detect	Observe	Recognize	Identify
	1655.2 m (5430.45 ft)	653.8 m (2145.01 ft)	331.0 m (1085.96 ft)	165.5 m (542.98 ft)

PTZ

Pan/Tilt Range	Pan: 0° to 360° endless; Tilt: –15° to +90°, auto flip 180°
Manual Control Speed	Pan: 0.1°–200°/s Tilt: 0.1°–120°/s
Preset Speed	Pan: 240°/s; Tilt: 200°/s
Preset	300
Tour	8 (up to 32 presets per tour)
Pattern	5
Scan	5
Power-off Memory	Yes
Idle Motion	Pattern;Preset;Scan;Tour
PTZ Protocol	DH-SD Pelco-P/D (Auto recognition)

Video

Resolution	1080p (1920 × 1080); 720p (1280 × 720); D1 (704 × 576/704 × 480)
Video Frame Rate	1080p (25/30 fps); 720p (25/30/50/60 fps)
Day/Night	Yes
BLC	Yes
WDR	120dB
HLC	Yes
White Balance	Auto; indoor; outdoor; tracking; manual; sodium lamp; natural light; street lamp
Gain Control	Auto; manual
Noise Reduction	2D NR; 3D NR
Defog	Electronic
Digital Zoom	16×
Image Rotation	180°
Privacy Masking	Yes
S/N Ratio	≥50 dB

Function

CVI Product Output Mode	TVI;CVI;CVBS;AHD(CVBS is only used for debugging)

Certification

Certifications	CE: EN55032/EN55024/EN50130-4 FCC: Part15 subpart B, ANSI C63.4-2014 UL: UL60950-1+CAN/CSA C22.2, No.60950-1

Port

Analog Output	1 channel (CVBS/CVI output, BNC)
RS-485	1 (baud rate range: 1200 bps–9600 bps)
Audio Input	1 channel (LINE IN, bare wire)
Alarm Input	2 (on-off value input: 0–5 VDC)
Alarm Output	1
Alarm Linkage	Scan; preset; tour; pattern; alarm digital output
Alarm Event	Alarm input

Power

Power Supply	12 VDC, 3 A ± 10%
Power Consumption	Basic: 10 W Max.: 22 W (PTZ + illuminator + heater)

Environment

Operating Temperature	–40 °C to +70 °C (–40 °F to +158 °F)
Operating Humidity	≤95%
Protection	IP66; TVS 6000V lightning proof; surge protection; voltage transient protection

Structure

Product Dimensions	269.9 mm × Φ160.0 mm (10.63" × Φ6.30")
Net Weight	3.0 kg (6.61 lb)
Gross Weight	4.2 kg (9.26 lb)

Ordering Information

Type	Model	Description
2MP HDCVI Camera	DH-SD49225DB-HC	2MP 25x Starlight IR PTZ HDCVI Camera, PAL
	DH-SD49225DBN-HC	2MP 25x Starlight IR PTZ HDCVI Camera, NTSC
	SD49225DB-HC	2MP 25x Starlight IR PTZ HDCVI Camera, PAL
	SD49225DBN-HC	2MP 25x Starlight IR PTZ HDCVI Camera, NTSC
Accessories	PFB305W	Wall Mount Bracket
	PFA120	Junction Box
	PFA111	Mount Adapter
	PFB300C	Ceiling Mount Bracket
	PFB301C	Ceiling Mount Bracket
	PFA150	Pole Mount Bracket
	PFA151	Corner Mount Bracket
	PFB301S-E	Plane Mount Bracket
	PFB303S	Parapet Mount Bracket
	DC12V/3A	Power Supply

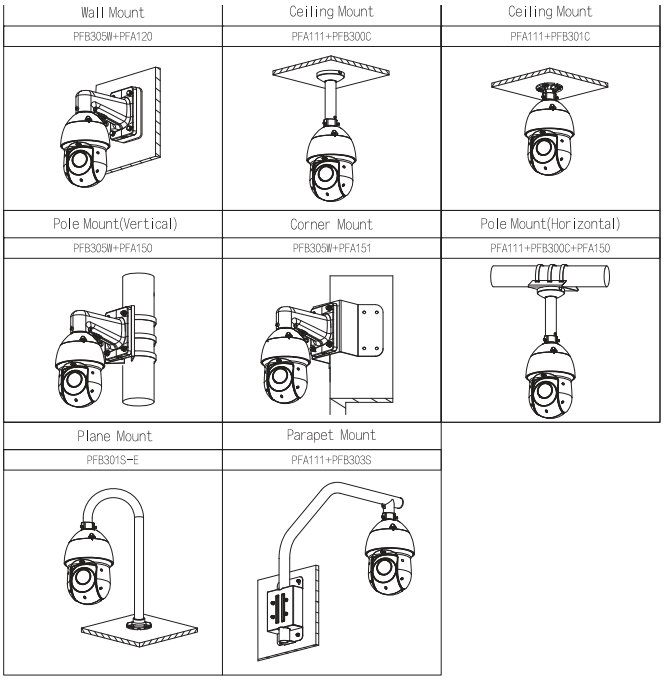

Accessories

Included:



PFB305W
Wall Mount Bracket

Optional:



PFA120
Junction Box



PFA111
Mount Adapter



PFB300C
Ceiling Mount
Bracket



PFB301C
Ceiling Mount
Bracket



PFA150
Pole Mount
Bracket



PFA151
Corner Mount
Bracket



PFB301S-E
Plane Mount
Bracket



PFB303S
Parapet Mount
Bracket



DC12V/3A
Power
Supply

Dimensions (mm [inch])

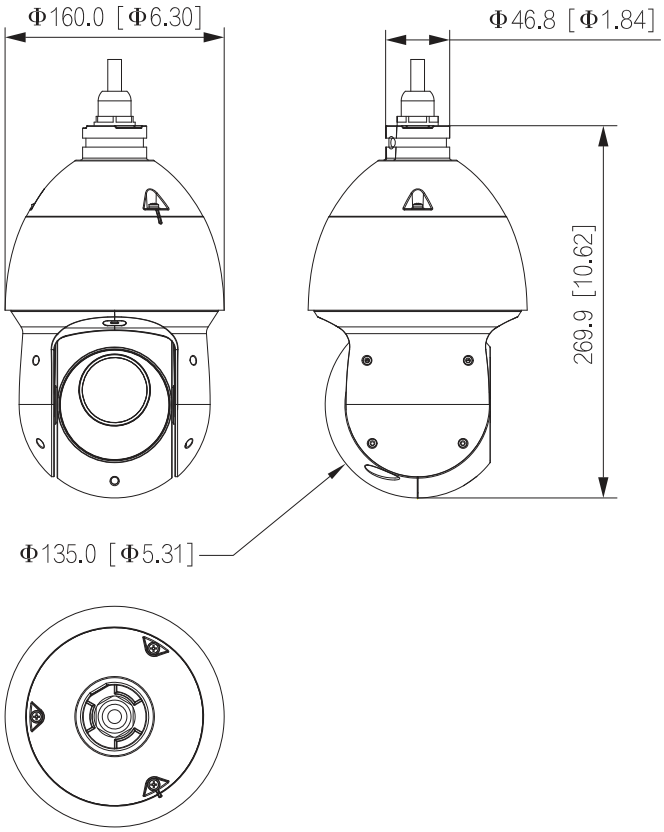

Rev 002.000 © 2023 Dahua. All rights reserved. Design and specifications are subject to change without notice.
The images, specifications and information mentioned in the document are only for reference, and might differ from the actual product.