DS-1661ZJ-Y

Pendant Mount



Key Feature

- Pendant Mount

Specification

Model	DS-1661ZJ-Y
Color	Hikvision white
Weight	1 kg (2.2 lb.)
Material	Aluminum Alloy
Dimension	Ø116.5 mm × 200 mm (Ø4.59'' × 7.9'')
Max. Load Capacity	Approx. 10 kg (22.05 lb.)

Available Model

DS-1661ZJ-Y

Dimension

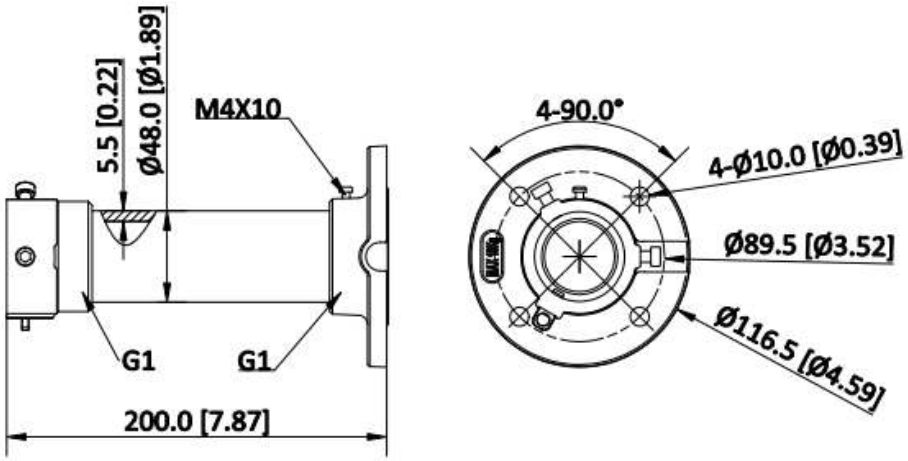

Unit: mm [inch]

SCALE	1:1