DS-1271ZJ-PT10

Pendant Mount



Feature

- Aluminum alloy and plastic with surface spray treatment
- The cap facilitates the installation

Dimension

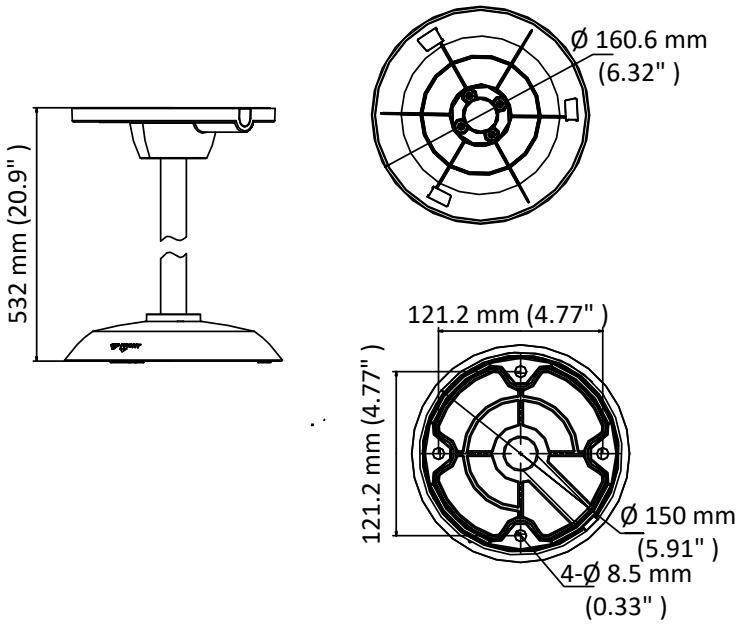

Available Model

DS-1271ZJ-PT10

Parameter

Model / Parameters	DS-1271ZJ-PT10
	Pendant Mount
Appearance	Hikvision White
Material	Aluminum Alloy and Plastic
Dimension	Ø 160.6 mm × 532 mm (6.32" × 20.9")
Weight	1300 g (2.87 lb.)

Note

- The mount should be installed on the flat surface.
- The waterproof rubber is necessary for the outdoor application.
- The wall must be capable of supporting at least 3 times as much as the total weight of the camera, and the mount.
- The mount’s maximum load capacity is 3 kg (6.61 lb.).