DS-1706ZJ

PT Joint



Feature

- Stainless steel
- Adjustable tilt angle from -45° to 45°, and pan angle from 0 ° to 360°

Dimension

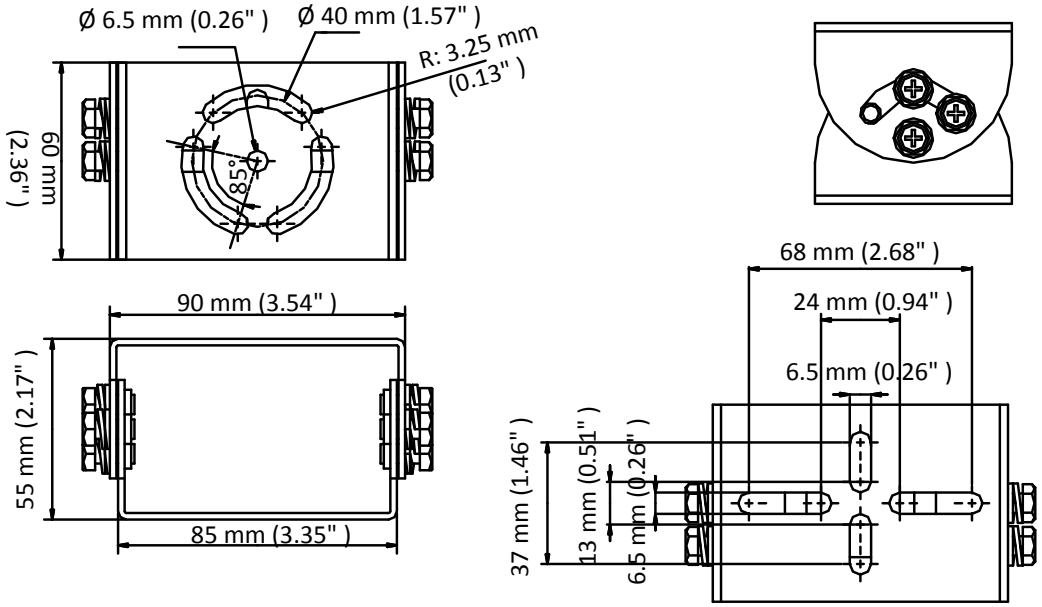

Available Model

DS-1706ZJ

Parameter

Model / Parameters	DS-1706ZJ
	PT Joint
Appearance	Natural Stainless Steel Color
Material	Stainless Steel
Dimension	90 mm × 55 mm × 60 mm (3.54" × 2.17" × 2.36")
Weight	270 g (0.60 lb.)

Note

- The joint’s maximum load capacity is 10 kg (22 lb.).