DS-1273ZJ-130-TRL(Black)

Wall Mount



Features

- Aluminum alloy with surface spray treatment
- Internal cable routing design
- Cap design facilitates installation

Dimension

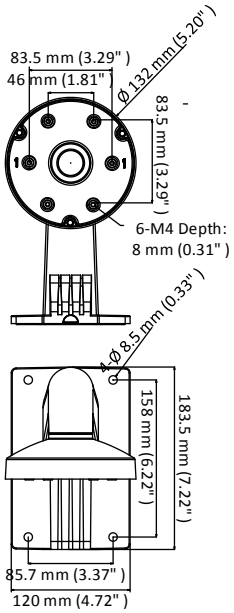

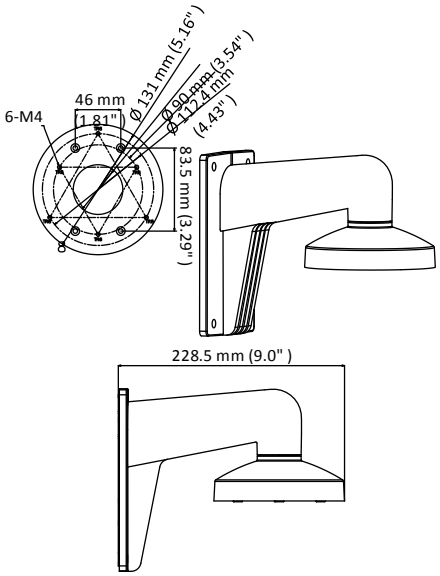

Available Model

DS-1273ZJ-130-TRL(Black)

Parameter

Model / Parameters	DS-1273ZJ-130-TRL(Black)
	Wall Mount
Appearance	Black
Material	Aluminum Alloy
Dimension	120 mm × 183.5 mm × 228.5 mm (4.72" × 7.22" × 9.0")
Weight	870 g (1.92 lb.)

Notes

- The mount should be installed on the flat surface.
- The wall must be capable of supporting at least 3 times as much as the total weight of the camera, and the mount.
- The maximum load capacity of the mount is 4.5 kg (9.9 lb.).