SBV-180BW

Backbox

Key Features

- Material : Aluminum
- Dimensions : Ø183.8x51mm(Ø7.23x2.01")
- Weight : 650g
- Color : White

- Supported products: XND-C9083RV/C8083RV/C7083RV/C6083RV, XND-C9083R/C8083R/C7083R/C6083R, XND-9083RV/8093RV/8083RV/6083RV, XNV-9083R/8093R/8083R/6083R, XND-9082RV/8082RV, XNV-9082R/8082R

Compatible Accessories (Optional)

XNV-8093R

XND-6083RV

XND-C6083RV

XNV-9083R

XND-C9083RV

XND-C8083RV

XND-9083RV

XNV-6083R

XND-C7083RV

XND-8093RV

XND-8083RV

XND-8082RV

XNV-9082R

XNV-8082R

Design and specifications are subject to change without notice. The latest product information / specification can be found at HanwhaVision.com
Hanwha Vision is formerly known as Hanwha Techwin.

© Hanwha Vision CO., LTD. All rights reserved.

SBV-180BW

Backbox

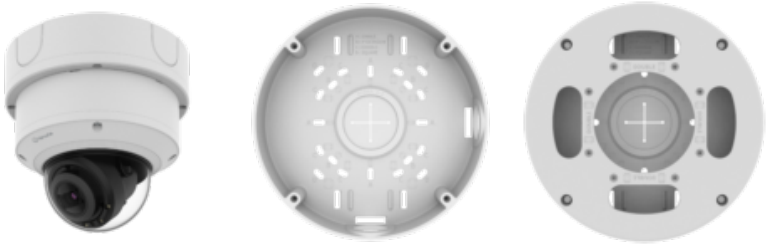

Specifications

Mechanical	
Color	White
Material	Aluminum
RAL code	RAL9003
Product dimensions / weight	Ø183.8x51mm(Ø7.23x2.01"), 650g
Mount Screw size	TR20
Conduit hole	19.1mm(3/4") (M25)
Supported products	XND-C9083RV/C8083RV/C7083RV/C6083RV, XND-C9083R/C8083R/C7083R/C6083R, XND-9083RV/8093RV/8083RV/6083RV, XNV-9083R/8093R/8083R/6083R, XND-9082RV/8082RV, XNV-9082R/8082R

Design and specifications are subject to change without notice. The latest product information / specification can be found at HanwhaVision.com
Hanwha Vision is formerly known as Hanwha Techwin.

© Hanwha Vision CO., LTD. All rights reserved.

SBV-180BW

Backbox

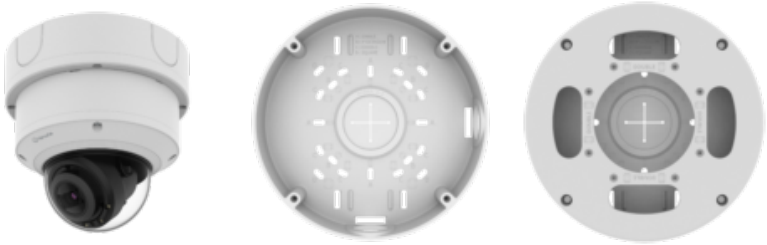

CAD

Unit:mm [inch]

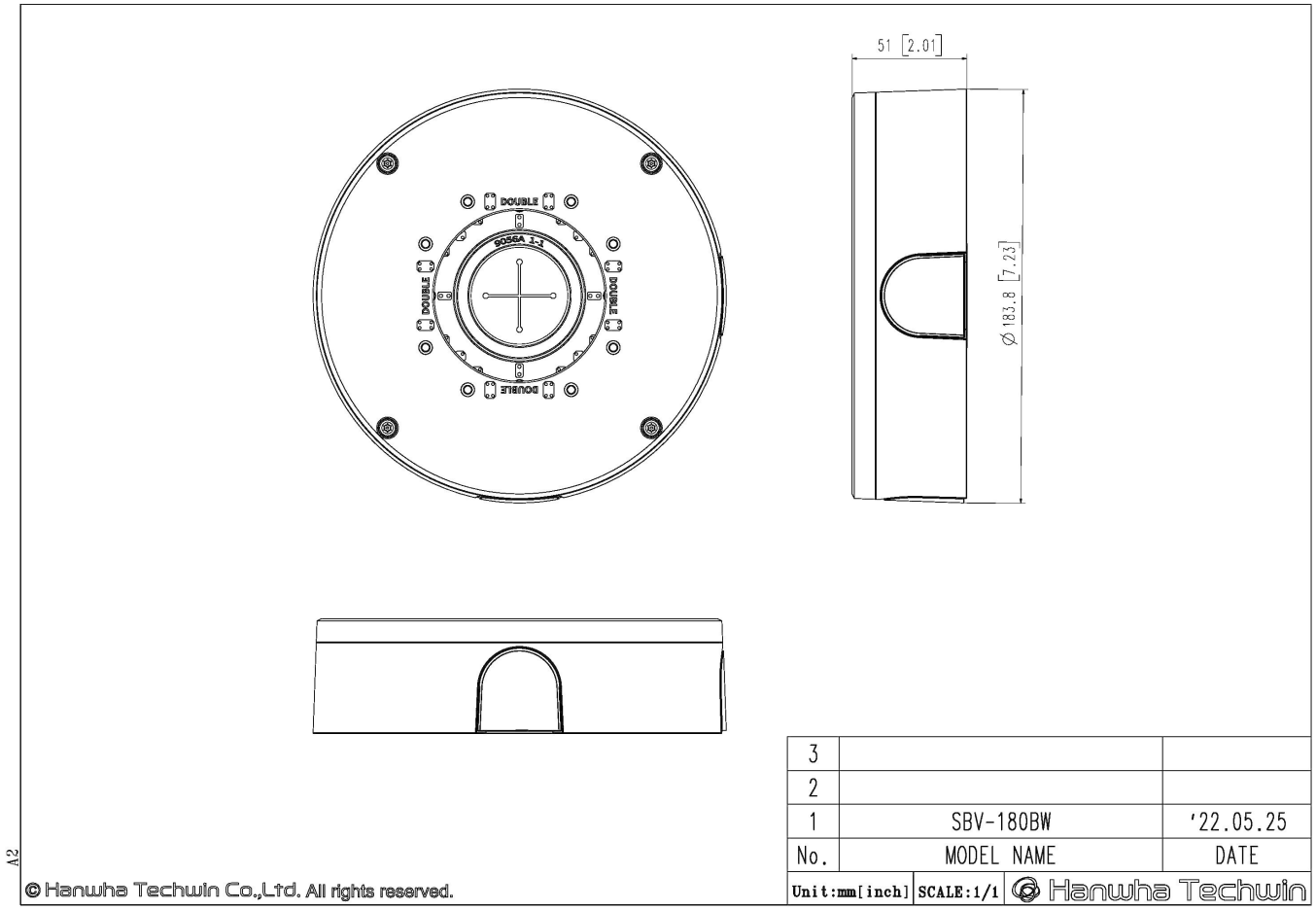

Design and specifications are subject to change without notice. The latest product information / specification can be found at HanwhaVision.com
Hanwha Vision is formerly known as Hanwha Techwin.

© Hanwha Vision CO., LTD. All rights reserved.